CITY OF SAN ANTONIO

PURCHASING AND GENERAL SERVICES DEPARTMENT

REQUEST FOR OFFER ("RFO") NO.: 6100001752

AIRPORT PASSENGER BOARDING BRIDGE REPAIR

Date Issued: JULY 23, 2012

RESPONSES MUST BE RECEIVED **NO LATER** THAN:
10:00 AM JULY 25, 2012

Responses may be submitted by any of the following means:
Electronic submission through the Portal
Hard copy in person or by mail

Address for hard copy responses:

Physical Address:
Purchasing & General Services
Riverview Tower
111 Soledad, Suite 1100
San Antonio, Texas 78205

Mailing Address:
Purchasing & General Services
P.O. Box 839966
San Antonio, Texas 78283-3966

For Hard Copy Submissions, Mark Envelope

"AIRPORT PASSENGER BOARDING BRIDGE REPAIR"

Offer Due Date: 10:00 A.M., JULY 25, 2012

RFO No.: 6100001752

Offeror's Name and Address

Bid Bond: NO Performance Bond: NO Payment Bond: NO Other: NO

See Supplemental Terms & Conditions for information on these requirements.

Affirmative Procurement Initiative: NO DBE / ACDBE Requirements: NO

See Instructions for Offerors and Attachments sections for more information on these requirements.

Pre-Submittal Conference * NO

* If YES, the Pre-Submittal conference will be held on **N/A** at N/A at N/A.

Staff Contact Person: SONNY MUNIZ, PROCUREMENT SPECIALIST II, P.O. Box 839966, San Antonio, TX 78283-3966
Email: OFELIO.MUNIZ@SANANTONIO.GOV

SBEDA Contact Information: N/A, N/A, N/A

002 - TABLE OF CONTENTS

002 - TABLE OF CONTENTS 2
003 - INSTRUCTIONS FOR OFFERORS 3
004 - SPECIFICATIONS / SCOPE OF SERVICES 8
005 - SUPPLEMENTAL TERMS & CONDITIONS 11
006 - GENERAL TERMS & CONDITIONS 14
007 - SIGNATURE PAGE 18
008 - STANDARD DEFINITIONS 19
009 - ATTACHMENTS 20

003 - INSTRUCTIONS FOR OFFERORS

Submission of Offers.

Submission of Hard Copy Offers. Submit one original offer, signed in ink, and two copies of the offer enclosed in a sealed envelope addressed to the Purchasing and General Services Department at the address and by the due date provided on the Cover Page. The name and address of offeror, the offer due date and RFO number and title shall be marked on the outside of the envelope(s). All times stated herein are Central Time. Any offer or modification received after the time and date stated on the Cover Page shall be rejected.

Submission of Electronic Offers. Submit one offer electronically by the due date provided on the Cover Page. All times stated herein are Central Time. Any offer or modification received after the time and date stated on the Cover Page shall be rejected. All forms in this solicitation which require a signature must have a signature affixed thereto, either by manually signing the document, prior to scanning it and uploading it with your submission, or affixing it electronically.

Offers sent to City by facsimile or email shall be rejected.

Modified Offers. Offers may be modified provided such modifications are received prior to the time and date set for submission of offers, and submitted in the same manner as original offers. For hard copy offers, provide a cover letter with the offer, indicating it is a modified offer and that the Original offer is being withdrawn. For electronic offers, a modified offer will automatically replace a prior offer submission. See below for information on submitting Alternate Offers.

City shall not be responsible for lost or misdirected offers or modifications.

Offerors must sign the Signature Page on hard copy offers and return the RFO document to City. For electronic offers, Offeror's electronic submission, with accompanying affirmations, constitutes a binding signature for all purposes.

Offerors are cautioned that they are responsible for the security of their log on ID and password, since unauthorized use could result in Offeror's being held liable for the submission.

Certified Vendor Registration Form. If Offeror has not completed the City's Certified Vendor Registration (CVR) Form, Offeror is required to do so prior to the due date for submission of offers. The CVR form may be accessed at http://www.sanantonio.gov/purchasing/. Offerors must identify the correct name of the entity that will be providing the goods and/or services under the contract. No nicknames, abbreviations (unless part of the legal title), shortened or short-hand names will be accepted in place of the full, true and correct legal name of the entity.

Alternate Offers. Alternate offers may be allowed at the sole discretion of City.

Hard Copy Alternate Offers. Hard copy alternate offers must be submitted in separate sealed envelopes in the same manner as submission of other offers. Alternate offers must be marked consecutively on the envelope as Alternate Offer No. 1, 2, etc. Failure to submit alternate offers in separate envelopes may result in rejection of an offer.

Electronic Alternate Offers Submitted Through the Portal. All alternate offers are recorded with original offers when submitted electronically.

Catalog Pricing. (This section applies to offers using catalog pricing, unless this is a cooperative purchase.)

The offer will be based on manufacturer's latest dated price list(s). Said price list(s) must denote the manufacturer, latest effective date and price schedule.

Offerors shall be responsible for providing one copy of the manufacturer's catalog for each manufacturer for which an offer is submitted. Offeror shall provide said catalog at the time of submission of its offer. Manufacturers' catalogs may be submitted in any of the following formats: paper copy or CD ROM for bids submitted on paper, or PDF file for offers submitted electronically.

Offerors may submit price lists other than the manufacturer's price list. Said price list(s) must denote the company name, effective date and price schedule. These price lists are subject to approval of the City Purchasing & General Services Department.

Specified items identified herein, if any, are for overall offer evaluation and represent the commonly and most used items. Net prices entered for those specified items must reflect the actual price derived from quoted price list less all discounts offered.

Restrictions on Communication.

Offerors are prohibited from communicating with: 1) elected City officials and their staff regarding the RFO or offers from the time the RFO has been released until the contract is posted as a City Council agenda item; and 2) City employees from the time the RFO has been released until the contract is awarded. These restrictions extend to "thank you" letters, phone calls, emails and any contact that results in the direct or indirect discussion of the RFO and/or offer submitted by Offeror. Violation of this provision by Offeror and/or its agent may lead to disqualification of the offer from consideration.

Exceptions to the restrictions on communication with City employees include:

Offerors may ask verbal questions concerning this RFO at the Pre-Submittal Conference.

Offerors may submit written questions, or objections to specifications, concerning this RFO to the Staff Contact Person listed on the Cover Page on or before calendar days prior to the date offers are due. Questions received after the stated deadline will not be answered. Questions submitted and the City's responses will be posted with this solicitation. All questions shall be sent by e-mail or through the portal.

Offerors may provide responses to questions asked of them by the Staff Contact Person after responses are received. The Staff Contact Person may request clarification to assist in evaluating the Offeror's response. The information provided is not intended to change the offer response in any fashion. Such additional information must be provided within two business days from City's request.

Offerors and/or their agents are encouraged to contact the Small Business Office of the International and Economic Development Department for assistance or clarification with issues specifically related to the City's Small Business Economic Development Advocacy (SBEDA) Program policy and/or completion of the SBEDA form (s), if any. The point of contact is identified on the Cover Page. Contacting the Small Business Office regarding this RFO after the due date is not permitted. If this solicitation contains Affirmative Procurement Initiatives, it will be noted on the Cover Page.

If this solicitation contains DBE/ACDBE requirements, respondents and/or their agents may contact the Aviation Department's DBE/ACDBE Liaison Officer for assistance or clarification with issues specifically related to the DBE/ACDBE policy and/or completion of the required form(s). Point of contact is Ms. Lisa Brice, who may be reached via telephone at (210) 207-3505 or through e-mail at lisa.brice@sanantonio.gov. Respondents and/or their agents may contact Ms. Brice at any time prior to the due date for submission of bids. Contacting her or her office regarding this RFO after the due date is not permitted. If this solicitation contains DBE/ACDBE requirements, it will be noted on the Cover Page.

Pre-Submittal Conference.

If a Pre-Submittal Conference is scheduled, it will be held at the time and place noted on the Cover Page. Offerors are encouraged to prepare and submit their questions in writing in advance of the Pre-Submittal Conference in order to expedite the proceedings. City's responses to questions received prior to the conference may be distributed at the Pre-Submittal Conference and posted with this solicitation. Attendance at the Pre-Submittal Conference is optional, but highly encouraged.

This meeting place is accessible to disabled persons. Call the Staff Contact Person for information on the location of the wheelchair accessible entrance, or to request an interpreter for the deaf. Interpreters for the deaf must be requested at least 48 hours prior to the meeting. For other assistance, call (210) 207-7245 Voice/TTY.

Any oral response given at the Pre-Submittal Conference that is not confirmed in writing and posted with this solicitation shall not be official or binding on City.

Changes to RFO.

Changes to this RFO made prior to the offer due date shall be made directly to the original RFO. Changes are captured by creating a replacement version each time the RFO is changed. It is Offeror's responsibility to check for

new versions until the offer due date. City will assume that all offers received are based on the final version of the RFO as it exists on the day offers are due.

No oral statement of any person shall modify or otherwise change or affect the terms, conditions or specifications stated in the RFO.

Preparation of Offers.

All information required by the RFO must be furnished or the offer may be deemed non-responsive and rejected. Any ambiguity in the offer as a result of omission, error, unintelligible or illegible wording shall be construed in the favor of City.

Correct Legal Name. If an Offeror is found to have incorrectly or incompletely stated the name of the entity that will provide goods and/or services, the offer may be rejected.

Line Item Offers. Any offer that is considered for award by each unit or line item, must include a price for each unit or line item for which Offeror wishes to be considered. All offers are awarded on the basis of low line item, low total line items, or in any other combination that serves the best interest of City, unless City designates this solicitation as an "all or none" offer in the Supplemental Terms & Conditions.

All or None Offers. Any offer that is considered for award on an "all or none" basis must include a price for all units or line items. In an "All or None" offer, a unit price left blank shall result in the offer being deemed nonresponsive and disqualified from consideration. An "All or None" offer is one in which City will award the entire contract to one offeror only.

Delivery Dates. Proposed delivery dates must be shown in the offer form where required and shall include weekends and holidays, unless specified otherwise in this RFO. Proposed delivery times must be specific. Phrases such as "as required", "as soon as possible" or "prompt" may result in disqualification of the offer. Special delivery instructions, if any, may be found in the Specifications / Scope of Services section of this document, or in the Purchase Order.

Tax Exemption. The City of San Antonio is exempt from payment of federal taxes, and State of Texas limited sales excise and use taxes. Offerors must not include such taxes in offer prices. An exemption certificate will be signed by City where applicable upon request by Offeror after contract award.

Samples, Demonstrations and Pre-award Testing. If requested by City, Offeror shall provide product samples, demonstrations, and/or testing of items offered to ensure compliance with specifications prior to award of the contract. Samples, demonstrations and/or testing must be provided within 7 calendar days of City's request. Failure to comply with City's request may result in rejection of an offer. All samples (including return thereof), demonstrations, and/or testing shall be at Offeror's expense. Samples will be returned upon written request. Requests for return of samples must be made in writing at the time the samples are provided. Otherwise, samples will become property of City at no cost to City. Samples that are consumed or destroyed during demonstrations or testing will not be returned.

Estimated Quantities for Annual Contracts.

Designation as an "annual" contract is found in the contract's title on the Cover Page of this document. The quantities stated are estimates only and are in no way binding upon City. Estimated quantities are used for the purpose of evaluation. City may increase or decrease quantities as needed. Where a contract is awarded on a unit price basis, payment shall be based on the actual quantities supplied.

Offerors shall thoroughly examine the drawings, specifications, schedule(s), instructions and all other contract documents.

Offerors shall make all investigations necessary to thoroughly inform themselves regarding plant and facilities for delivery of material and equipment, or conditions and sites/locations for providing goods and services as required by this RFO. No plea of ignorance by Offeror will be accepted as a basis for varying the requirements of City or the compensation to Offeror.

Confidential or Proprietary Information. All offers become the property of City upon receipt and will not be returned. Any information deemed to be confidential by Offeror should be clearly noted; however, City cannot guarantee that it will not be compelled to disclose all or part of any public record under the Texas Public Information Act, since information deemed to be confidential by Offeror may not be considered confidential under Texas law, or pursuant to a

Court order. Pricing may be tabulated and posted to City's website, so shall not be considered proprietary or confidential.

Costs of Preparation. Offeror shall bear any and all costs that are associated with the preparation of the Offer, attendance at the Pre-Submittal conference, if any, or during any phase of the selection process.

Rejection of Offers.

City may reject any and all offers, in whole or in part, cancel the RFO and reissue the solicitation. City may reject an offer if:

Offeror misstates or conceals any material fact in the offer; or

The offer does not strictly conform to law or the requirements of the offer;

The offer is conditional; or

Any other reason that would lead City to believe that the offer is non-responsive or Offeror is not responsible.

City, in its sole discretion, may also waive any minor informalities or irregularities in any offer, such as failure to submit sufficient offer copies, failure to submit literature or similar attachments, or business affiliation information.

Changes to Offer Form. Offers must be submitted on the forms furnished. Offers that change the format or content of City's RFO may be rejected.

Withdrawal of Offers. Offers may be withdrawn prior to the due date. Written notice of withdrawal shall be provided to the Staff Contact Person for offers submitted in hard copy. Offers submitted electronically may be withdrawn electronically.

Evaluation and Award of Contract.

City reserves the right to make an award on the basis of City's best interests. Award may also be made based on low line item, low total line items, or in any other combination that serves the best interest of City, unless City designates this solicitation as an "all or none" offer in the Supplemental Terms & Conditions.

A written award of acceptance, manifested by a City Ordinance, and a purchase order furnished to Offeror results in a binding contract without further action by either party. Offeror must have the Purchase Order before making any delivery.

City reserves the right to delete items prior to the awarding of the contract, and purchase said items by other means.

Inspection of Facilities/Equipment. Depending on the nature of the RFO, Offerors' facilities and equipment may be a determining factor in making the offer award. All Offerors may be subject to inspection of their facilities and equipment.

Prompt Payment Discount.

Provided Offeror meets the requirements stated herein, City shall take Offeror's offered prompt payment discount into consideration. The evaluation will not be based on the discount percentage alone, but rather the net price as determined by applying the discount to the offer price, either per line item or total offer amount. However, City reserves the right to reject a discount if the percentage is too low to be of value to City, all things considered. City may also reject a discount if the percentage is so high as to create an overly large disparity between the price City would pay if it is able to take advantage of the discount and the price City would pay if it were unable to pay within the discount period. City may always reject the discount and pay within the 30 day period, at City's sole option.

City will not consider discounts that provide fewer than 10 days to pay in order to receive the discount.

For example, payment terms of 2% 5, Net 30 will NOT be considered in offer evaluations or in the payment of invoices. However, payment terms of 2% 10, Net 30 will result in a two percent reduction in the offer price during offer evaluation, and City will take the 2% discount if the invoice is paid within the 10 day time period.

Prohibited Financial Interest. The Charter of the City of San Antonio and its Ethics Code prohibit a City officer or employee, as those terms are defined in the Ethics Code, from having a financial interest in any contract with City or any City agency such as City-owned utilities. An officer or employee has a "prohibited financial interest" in a contract with City

or in the sale to City of land materials, supplies or service, if any of the following individual(s) or entities is a party to the contract or sale: the City officer or employee; his parent, child or spouse; a business entity in which he or his parent, child or spouse owns ten (10) percent or more of the voting stock or shares of the business entity, or ten (10) percent or more of the fair market value of the business entity; or a business entity in which any individual or entity above listed is a subcontractor on a City contract, a partner or a parent or subsidiary business entity.

Conflict of Interest. Effective January 1, 2006, Chapter 176 of the Texas Local Government Code requires that persons, or their agents, who seek to contract for the sale or purchase of property, goods, or services with the City, shall file a completed conflict of interest questionnaire with the City Clerk not later than the 7th business day after the date that the person: (1) begins contract discussions or negotiations with the City; or (2) submits to the City an application, response to a request for proposals or offers, correspondence, or another writing related to a potential agreement with the City. The conflict of interest questionnaire form is available from the Texas Ethics Commission at www.ethics.state.tx.us. Completed conflict of interest questionnaires may be mailed or delivered by hand to the Office of the City Clerk. If mailing a completed conflict of interest questionnaire, mail to: Office of the City Clerk, P.O. Box 839966, San Antonio, TX 78283-3966. If delivering a completed conflict of interest questionnaire, deliver to: Office of the City Clerk, City Hall, 2nd floor, 100 Military Plaza, San Antonio, TX 78205. Offeror should consult its own legal advisor with questions regarding the statute or form. Do not include this form with your sealed offer. The Purchasing Division will not deliver the form to the City Clerk for you.

004 - SPECIFICATIONS / SCOPE OF SERVICES

SCOPE:

The City of San Antonio, Aviation Department is soliciting a request for offer for a vendor to repair a passenger boarding bridge that was damaged when struck by a private jet. The selected vendor will provide parts, labor and equipment to remove, relocate, repair and install the passenger boarding bridge at the San Antonio International Airport in accordance with the specifications listed herein.

DELIVERY:

Delivery of parts will be made to the San Antonio International Airport, Aviation Facilities Maintenance, 10223 John Saunders, San Antonio, Texas 78216. Delivery of parts shall be within 6 weeks of award.

STANDARD REQUIREMENTS:

The Canopy shall be part number A4959303 and include all related items associated with the parts list of the canopy (Attachment B).

The Autoleveler shall be part number A4209743 and include all related items associated with the parts list of the autoleveler (Attachment C).

ThyssenKrupp Airport Systems is the sole provider of the boarding bridge parts and parts must be consistent with the specifications listed herein.

SPECIFICATIONS (PARTS):

ITEM 1 Canopy Universal II

Part Number: A4959303

ITEM 2 AutoLeveler

Part Number: A4209743

ITEM 3 U-Profile, LH, Floor, Rot. Cab

Part Number: A4211369

ITEM 4 U-Profile, RH, Floor, Rot. Cab

Part Number: A4211370

ITEM 5 Shipping and Handling of Parts

Delivery to: Aviation Facilities Maintenance, 10223 John Saunders, San Antonio, Texas 78216.

SPECIFICATIONS (LABOR):

ITEM 6 Labor

Labor to stage damaged bridge, bridge elevations and bridge landing (including removal and transport of the damaged bridge from Gate A1 to the apron staging location)

ITEM 7 Equipment

Protection materials where damaged bridge is stored

ITEM 8 Labor

Labor to repair damaged bridge

ITEM 9 Equipment

Equipment to move repaired bridge from stage area to Gate A16

ITEM 10 Labor

Labor to move damaged bridge from stage area to Gate A16

ITEM 11 Equipment

Equipment to install repaired bridge at Gate A16

ITEM 12 Labor

Labor to install repaired bridge at Gate A16

CONTRACTOR RESPONSIBILITIES

The Contractor shall be responsible for the following:

Provide all materials, equipment, labor, hardware, transportation, and tools necessary for complete fully functional and fully installed passenger boarding bridge. The Contractor shall complete the work in the best and most workmanlike manner to complete installation and everything incidental thereto, as stated in the specifications or reasonably implied on and in accordance with the contract documents.

Provide full time supervision and properly skilled craftsmen to perform the work required under this contract.

Confine all operations and workforce to the space allowed by law and as allotted by the City. The Contractor, at his expense, shall be responsible for any damage to adjacent property, etc.

Trash/Debris Removal:

The Contractor shall furnish and pay for all means of removing all trash and debris generated by work associated under this contract. The construction area shall be kept clean and maintained on a daily basis. No debris shall be dumped and left about the surrounding areas.

Airport Security Requirements:

The Contractor's personnel shall be badged and may be monitored by Airport personnel.

Project Completion:

Upon completion, Contractor shall ensure area is clean and free of any and all trash, scraps, cartons, etc.

CITY RESPONSIBILITIES

The City shall provide access to the work site contingent on the Contractor satisfying San Antonio International Airport escort requirements.

The City assumes no responsibility for the Contractor's property.

The City shall attempt to provide the Contractor with a temporary staging area, if necessary, to accomplish the work.

The City or designated representative reserves the right to inspect the Contractor's materials to accomplish the work and to inspect the Contractor's workmanship. Additionally, the City or designated representative reserves the right to reject the Contractor's materials and workmanship.

005 - SUPPLEMENTAL TERMS & CONDITIONS

Original Contract Term.

This contract shall begin upon the effective date of the ordinance awarding the contract, or date specified in the award letter if this contract does not exceed $50,000. This contract shall terminate upon completion of all work described herein or delivery of all goods ordered, as applicable.

Warranty.

A minimum of 90-days product guarantee or the manufacturer's standard commercial warranty, whichever is greater, shall apply to all products and/or services purchased under this RFO, unless otherwise specified in the Specifications/Scope of Services section of this RFO. This warranty shall provide for replacement of defective merchandise, parts, and labor, and shall include pick-up of the defective merchandise from City and delivery of the replacement(s) to the same location. The warranty shall be effective from the date of acceptance of the merchandise, or completion of the service, as applicable.

ANY TERM OR CONDITION IN ANY DOCUMENT FURNISHED BY VENDOR, DISCLAIMING THE IMPLIED WARRANTY OF MERCHANTABILITY OR OF FITNESS FOR A PARTICULAR PURPOSE, OR ATTEMPTING TO LIMIT VENDOR'S LIABILITY SHALL BE OF NO FORCE OR EFFECT, AND SHALL BE STRICKEN FROM THE CONTRACT DOCUMENTS AS IF NEVER CONTAINED THEREIN.

All Or None Bid.

City of San Antonio will make award to one vendor only.

Insurance.

Prior to the commencement of any work under this Agreement, Vendor shall furnish copies of all required endorsements and completed Certificate(s) of Insurance to the City's Finance Department, which shall be clearly labeled "Airport Passenger Boarding Bridge Repair" in the Description of Operations block of the Certificate. The Certificate(s) shall be completed by an agent and signed by a person authorized by that insurer to bind coverage on its behalf. City will not accept a Memorandum of Insurance or Binder as proof of insurance. The certificate(s) must have the agent's signature and phone number, and be mailed, with copies of all applicable endorsements, directly from the insurer's authorized representative to City. City shall have no duty to pay or perform under this Agreement until such certificate and endorsements have been received and approved by City's Finance Department. No officer or employee, other than City's Risk Manager, shall have authority to waive this requirement.

City reserves the right to review the insurance requirements of this Article during the effective period of this Agreement and any extension or renewal hereof and to modify insurance coverages and their limits when deemed necessary and prudent by City's Risk Manager based upon changes in statutory law, court decisions, or circumstances surrounding this Agreement. In no instance will City allow modification whereby City may incur increased risk.

A Vendor's financial integrity is of interest to City; therefore, subject to Vendor's right to maintain reasonable deductibles in such amounts as are approved by City, Vendor shall obtain and maintain in full force and effect for the duration of this Agreement, and any extension here of, at Vendor's sole expense, insurance coverage written on an occurrence basis, unless otherwise indicated, by companies authorized to do business in the State of Texas and with an A.M Best's rating of no less than A- (VII), in the following types and for an amount not less than the amount listed below:

TYPE	AMOUNTS
1. Workers' Compensation 2. Employers' Liability	Statutory $500,000/$500,000/$500,000
3. Broad form Commercial General Liability Insurance to include coverage for the	For Bodily Injury and Property Damage of $1,000,000 per occurrence;

following: a. Premises operations b. Independent Contractors c. Products/completed operations d. Personal Injury e. Contractual Liability f. Damage to property rented by you	$2,000,000 General Aggregate, or its equivalent in Umbrella or Excess Liability Coverage f. $100,000
4. Business Automobile Liability a. Owned/leased vehicles b. Non-owned vehicles c. Hired Vehicles	Combined Single Limit for Bodily Injury and Property Damage of $1,000,000 per occurrence

Vendor agrees to require, by written contract, that all subcontractors providing goods or services hereunder obtain the same insurance coverages required of Vendor herein, and provide a certificate of insurance and endorsement that names Vendor and City as additional insureds. Vendor shall provide City with said certificate and endorsement prior to the commencement of any work by the subcontractor. This provision may be modified by City's Risk Manager, without subsequent City Council approval, when deemed necessary and prudent, based upon changes in statutory law, court decisions, or circumstances surrounding this agreement. Such modification may be enacted by letter signed by City's Risk Manager, which shall become a part of the contract for all purposes.

As they apply to the limits required by City, City shall be entitled, upon request and without expense, to receive copies of the policies, declaration page, and all endorsements thereto and may require the deletion, revision, or modification of particular policy terms, conditions, limitations, or exclusions (except where policy provisions are established by law or regulation binding upon either of the parties hereto or the underwriter of any such policies). Vendor shall be required to comply with any such requests and shall submit a copy of the replacement certificate of insurance to City at the address provided below within 10 days of the requested change. Vendor shall pay any costs incurred resulting from said changes.

City of San Antonio
Attn: Finance Department
P.O. Box 839966
San Antonio, Texas 78283-3966

Vendor agrees that with respect to the above required insurance, all insurance policies are to contain or be endorsed to contain the following provisions:

Name City, its officers, officials, employees, volunteers, and elected representatives as additional insureds by endorsement, as respects operations and activities of, or on behalf of, the named insured performed under contract with City, with the exception of the workers' compensation and professional liability policies;

Provide for an endorsement that the "other insurance" clause shall not apply to the City of San Antonio where City is an additional insured shown on the policy;

Workers' compensation, employers' liability, general liability and automobile liability policies will provide a waiver of subrogation in favor of City; and

Provide advance written notice directly to City of any suspension, cancellation, non-renewal or material change in coverage, and not less than ten (10) calendar days advance notice for nonpayment of premium.

Within five (5) calendar days of a suspension, cancellation or non-renewal of coverage, Vendor shall provide a replacement Certificate of Insurance and applicable endorsements to City. City shall have the option to suspend Vendor's performance should there be a lapse in coverage at any time during this contract. Failure to provide and to maintain the required insurance shall constitute a material breach of this Agreement.

In addition to any other remedies City may have upon Vendor's failure to provide and maintain any insurance or policy endorsements to the extent and within the time herein required, City shall have the right to order Vendor to stop work hereunder, and/ or withhold any payment(s) which become due to Vendor hereunder until Vendor demonstrates compliance with the requirements hereof.

Nothing herein contained shall be construed as limiting in any way the extent to which Vendor may be held responsible for payment of damages to persons or property resulting from Vendor's or its subcontractors' performance of the work covered under this Agreement.

It is agreed that Vendor's insurance shall be deemed primary and non-contributory with respect to any insurance or self insurance carried by City for liability arising out of operations under this Agreement.

It is understood and agreed that the insurance required is in addition to and separate from any other obligation contained in this Agreement and that no claim or action by or on behalf of City shall be limited to insurance coverage provided.

Vendor and any subcontractors are responsible for all damage to their own equipment and/or property.

Incorporation of Attachments.

Each of the attachments listed below is an essential part of this contract, which governs the righ ts and duties of the parties, incorporated herein by reference, and shall be interpreted in the order of priority as appears below, with this document taking priority over all attachments:

Attachment A – Price Schedule

Attachment B – Canopy Drawing and parts List

006 - GENERAL TERMS & CONDITIONS

Electronic Offer Equals Original. If Vendor is submitting an electronic offer, City and Vendor each agree that this transaction may be conducted by electronic means, as authorized by Chapter 322, Texas Business & Commerce Code, known as the Electronic Transactions Act.

Delivery of Goods/Services.

Destination Contract. Vendor shall deliver all goods and materials F.O.B., City of San Antonio's designated facility, inside delivery, freight prepaid, to the address provided in this RFO or, if different, in the Purchase Order. Vendor shall bear the risk of loss until delivery. Freight charges will be paid only when expedited delivery is requested and approved in writing by City. Vendor shall be responsible for furnishing necessary personnel or equipment and/or making necessary arrangements to off load at City of San Antonio facility, unless otherwise noted herein.

Failure to Deliver. When delivery is not met as provided for in the contract, City may make the purchase on the open market, with any cost in excess of the contract price paid by Vendor, in addition to any other direct, indirect, consequential or incidental damages incurred by City as a result thereof. In addition, Vendor may be removed from City's list of eligible bidders.

Purchase Orders. Each time a City department wishes to place an order against this contract, it will issue Vendor a purchase order. Vendor must have the purchase order before making any delivery.

Acceptance by City. City shall have a reasonable time (but not less than 30 days) after receipt to inspect the goods and services tendered by Vendor. City at its option may reject all or any portion of such goods or services which do not, in City's sole discretion, comply in every respect with all terms and conditions of the contract. City may elect to reject the entire goods and services tendered even if only a portion thereof is nonconforming. If City elects to accept nonconforming goods and services, City, in addition to its other remedies, shall be entitled to deduct a reasonable amount from the price thereof to compensate City for the nonconformity. Any acceptance by City, even if non-conditional, shall not be deemed a waiver or settlement of any defect in such goods and services.

Testing. After award of contract, City may, at its sole option, test the product delivered to ensure it meets specifications. Initial testing shall be at City's expense. However, if the product does not to meet specifications, Vendor shall reimburse City for the costs of testing. City may withhold the cost of testing from any amounts owed to Vendor under this or any other contract, or invoice Vendor for same. If invoiced, Vendor shall pay City within 30 calendar days' of the invoice.

Invoicing and Payment.

Address for Invoices. All original invoices must be sent to: City of San Antonio, Attn: Accounts Payable, P.O. Box 839976, San Antonio, Texas 78283-3976.

Information Required On Invoice.

All invoices must be in a form and content approved by City. City may require modification of invoices if necessary in order to satisfy City that all billing is proper and pursuant to the terms of the contract. Invoices are required to show each City Purchase Order Number. Invoices must be legible. Items billed on invoices must be specific as to applicable stock, manufacturer, catalog or part number (if any). All invoices must show unit prices for each item being billed, the quantity of items being billed and the total for each item, as well as the total for all items on the invoice. If prices are based on list prices basis, then the list prices, the percentage discount or percentage surcharge, net unit prices, extensions and net total prices must be shown. Prompt payment discounts offered shall be shown separately on the invoice.

Payment by City.

In accordance with the Texas Prompt Payment Act, City shall have not less than 30 days to pay for goods or services. Time for payment, including payment under discount terms, will be computed from the later of: (1) the date City receives conforming goods under the contract; (2) the date performance of the service under the contract is completed; or (3) the date City receives a correct and valid invoice for the goods or services. Payment is deemed to be made on the date of mailing of the check. Payment is made in US dollars only.

This provision shall not apply where there is a bona fide dispute between City and Vendor about the goods delivered or the service performed that causes the payment to be late, or where the invoice is not mailed to the address provided herein.

The payment amount due on invoices may not be manually altered by City personnel. Once disputed items are reconciled, Vendor must submit a corrected invoice or a credit memorandum for the disputed amount. City will not make partial payments on an invoice where there is a dispute.

NECESSITY OF TIMELY INVOICE / WAIVER OF PAYMENT. NOTWITHSTANDING THE FORGOING, CITY CANNOT PAY FOR ANY GOODS OR SERVICES WITHOUT AN INVOICE. VENDOR MUST INVOICE CITY NO LATER THAN 90 CALENDAR DAYS FROM THE DATE GOODS ARE DELIVERED OR SERVICES RENDERED. FAILURE TO SUBMIT AN INVOICE WITHIN SAID 90 DAY SHALL NEGATE ANY LIABILITY ON THE PART OF CITY AND CONSTITUTE A **WAIVER** BY VENDOR OF ANY AND ALL RIGHT OR CLAIMS TO COLLECT MONEYS THAT VENDOR MAY RIGHTFULLY BE OTHERWISE ENTITLED TO FOR GOODS OR SERVICES PERFORMED.

The total price for all goods and/or services is shown on the Price Schedule. No additional fees or expenses of Vendor shall be charged by Vendor nor be payable by City. The parties hereby agree that all compensable expenses of Vendor are shown on the Price Schedule. If there is a discrepancy on the Price Schedule between the unit price for an item, and the extended price, the unit price shall govern.

Amendments. Except where the terms of this contract expressly provide otherwise, any alterations, additions, or deletions to the terms hereof, shall be effected by amendment, in writing, executed by both City and Vendor. The Director of the Purchasing and General Services Department, or Director's designee, shall have authority to execute amendments on behalf of City without further action by the San Antonio City Council, subject to and contingent upon appropriation of funds for any increase in expenditures by City.

Termination.

Termination-Breach. Should vendor fail to fulfill in a timely and proper manner, as determined solely by the Director, its material obligations under this contract, or violate any of the material terms of this contract, City shall have the right to immediately terminate the contract in whole or in part. Notice of termination shall be provided in writing to the Vendor, effective upon the date set forth in the notice. City may, in City's sole discretion, provide an opportunity for Vendor to cure the default. If City elects to offer an opportunity to cure, City shall provide notice to Vendor specifying the matters in default and the cure period. If Vendor fails to cure the default within the cure period, City shall have the right, without further notice, to terminate the contract in whole or in part. Such termination shall not relieve Vendor of any liability to the City for damages sustained by virtue of any breach by Vendor.

Termination-Notice. City may terminate this contract, in whole or in part, without cause. City shall be required to give Vendor notice ten days prior to the date of termination of the contract without cause.

Termination-Funding. City retains the right to terminate this contract at the expiration of each of City's budget periods. This contract is conditioned on a best efforts attempt by City to obtain and appropriate funds for payment of any debt due by City herein.

Termination by City may be effected by Director, without further action by the San Antonio City Council.

Independent Contractor. Vendor covenants and agrees that it is an independent contractor and not an officer, agent, servant or employee of City. City shall not be liable for any claims which may be asserted by any third party occurring in connection with the services to be performed by Vendor under this contract and that Vendor has no authority to bind City. The doctrine of respondeat superior shall not apply as between City and Vendor.

INDEMNIFICATION.

VENDOR covenants and agrees to FULLY INDEMNIFY, DEFEND and HOLD HARMLESS, CITY and the elected officials, employees, officers, directors, volunteers and representatives of CITY, individually and collectively, from and against any and all costs, claims, liens, damages, losses, expenses, fees, fines, penalties, proceedings, actions, demands, causes of action, liability and suits of any kind and nature, including but not limited to, personal or bodily injury, death and property damage, made upon CITY directly or indirectly arising out of, resulting from or related to VENDOR'S activities under this Agreement, including any acts or omissions of VENDOR, any agent, officer, director, representative, employee, consultant or subcontractor of VENDOR, and their respective officers, agents employees, directors and representatives while in the exercise of the rights or performance of the duties under this Agreement. The indemnity provided for in this paragraph

shall not apply to any liability resulting from the negligence of CITY, it s officers or employees, in instances where such negligence causes personal injury, death, or property damage. IN THE EVENT VENDOR AND CITY ARE FOUND JOINTLY LIABLE BY A COURT OF COMPETENT JURISDICTION, LIABILITY SHALL BE APPORTIONED COMPARATIVELY IN ACCORDANCE WITH THE LAWS FOR THE STATE OF TEXAS, WITHOUT, HOWEVER, WAIVING ANY GOVERNMENTAL IMMUNITY AVAILABLE TO CITY UNDER TEXAS LAW AND WITHOUT WAIVING ANY DEFENSES OF THE PARTIES UNDER TEXAS LAW. In addition, Vendor agrees to indemnify, defend, and hold City harmless from any claim involving patent infringement, trademarks, trade secrets, and copyrights on goods supplied.

The provisions of this INDEMNITY are solely for the benefit of the parties hereto and not intended to create or grant any rights, contractual or otherwise, to any other person or entity. VENDOR shall advise CITY in writing within 24 hours of any claim or demand against CITY or VENDOR known to VENDOR related to or arising out of VENDOR's activities under this AGREEMENT and shall see to the investigation and defense of such claim or demand at VENDOR's cost. CITY shall have the right, at its option and at its own expense, to participate in such defense without relieving VENDOR of any of its obligations under this paragraph.

Assignment. Except as otherwise stated herein, Vendor may not sell, assign, pledge, transfer or convey any interest in this contract, nor delegate the performance of any duties hereunder, by transfer, by subcontracting or any other means, without the consent of Director. As a condition of such consent, if such consent is granted, Vendor shall remain liable for completion of the services and provision of goods outlined in this contract in the event of default by the successor vendor, assignee, transferee or subcontractor. Any attempt to transfer, pledge or otherwise assign this Contract without said written approval, shall be void ab initio and shall confer no rights upon any third person.

Ownership of Documents. Pursuant to Texas Local Government Code Chapter 201, any and all Records produced by Vendor pursuant to the provisions of this contract are the exclusive property of City; and no such Record shall be the subject of any copyright or proprietary claim by Vendor. The term "Record" as used herein shall mean any document, paper, letter, book, map, photograph, sound or video recording, microfilm, magnetic tape, electronic medium, or other information recording medium, regardless of physical form or characteristic. Vendor understands and acknowledges that as the exclusive owner of any and all such Records, City has the right to use all such Records as City desires, without restriction.

Records Retention.

Vendor and its subcontractors, if any, shall properly, accurately and completely maintain all documents, papers, and records, and other evidence pertaining to the services rendered hereunder ("Documents"), and shall make such Documents available to City at their respective offices, at all reasonable times and as often as City may deem necessary during the contract period, including any extension or renewal hereof, and the record retention period established herein, for purposes of audit, inspection, examination, and making excerpts or copies of same by City and any of its authorized representatives.

Vendor shall retain any and all Documents produced as a result of services provided hereunder for a period of four years ("Retention Period") from the date of termination of the contract. If, at the end of the Retention Period, there is litigation or other questions arising from, involving or concerning these Documents or the services provided hereunder, Vendor shall retain the records until the resolution of such litigation or other such questions. Vendor acknowledges and agrees that City shall have access to any and all such Documents at any and all times, as deemed necessary by City, during said Retention Period. City may, at its election, require Vendor to return the documents to City at Vendor's expense prior to or at the conclusion of the Retention Period. In such event, Vendor may retain a copy of the documents.

Vendor shall notify City, immediately, in the event Vendor receives any requests for information from a third party, which pertain to the Documents referenced herein. Vendor understands and agrees that City will process and handle all such requests.

Severability. If any clause or provision of this contract is held invalid, illegal or unenforceable under present or future federal, state or local laws, including but not limited to the City Charter, City Code, or ordinances of the City of San Antonio, Texas, then and in that event it is the intention of the parties hereto that such invalidity, illegality or unenforceability shall not affect any other clause or provision hereof and that the remainder of this contract shall be construed as if such invalid, illegal or unenforceable clause or provision was never contained herein. It is also the intention of the parties hereto that in lieu of each clause or provision of this contract that is invalid, illegal, or unenforceable, there be added as a part of the contract a clause or provision as similar in terms to such invalid, illegal or unenforceable clause or provision as may be possible, legal, valid and enforceable.

Compliance with Law. Vendor shall provide and perform all services required under this Agreement in compliance with all applicable federal, state and local laws, rules and regulations.

Certifications. Vendor warrants and certifies that Vendor and any other person designated to provide services hereunder has the requisite training, license and/or certification to provide said services, and meets all competence standards promulgated by all other authoritative bodies, as applicable to the services provided herein.

Non-waiver of Performance. Unless otherwise specifically provided for in this Agreement, a waiver by either Party of a breach of any of the terms, conditions, covenants or guarantees of this Agreement shall not be construed or held to be a waiver of any succeeding or preceding breach of the same or any other term, condition, covenant or guarantee herein contained. Further, any failure of either Party to insist in any one or more cases upon the strict performance of any of the covenants of this Agreement, or to exercise any option herein contained, shall in no event be construed as a waiver or relinquishment for the future of such covenant or option. In fact, no waiver, change, modification or discharge by either party hereto of any provision of this Agreement shall be deemed to have been made or shall be effective unless expressed in writing and signed by the party to be charged. No act or omission by a Party shall in any manner impair or prejudice any right, power, privilege, or remedy available to that Party hereunder or by law or in equity, such rights, powers, privileges, or remedies to be always specifically preserved hereby.

Venue. Venue of any court action brought directly or indirectly by reason of this contract shall be in Bexar County, Texas. This contract is made and is to be performed in Bexar County, Texas, and is governed by the laws of the State of Texas.

Non-discrimination. As a condition of entering into this agreement, Vendor represents and warrants that it will comply with City's Commercial Nondiscrimination Policy, as described under Section IILC.1 of the SBEDA Ordinance. As part of such compliance, Vendor shall not discriminate on the basis of race, color, religion, ancestry or national origin, sex, age, marital status, sexual orientation, or on the basis of disability or other unlawful forms of discrimination in the solicitation, selection, hiring or commercial treatment of subcontractors, vendors, suppliers, or commercial customers, nor shall Vendor retaliate against any person for reporting instances of such discrimination. Vendor shall provide equal opportunity for subcontractors, vendors and suppliers to participate in all of its public sector and private sector subcontracting and supply opportunities, provided that nothing contained in this clause shall prohibit or limit otherwise lawful efforts to remedy the effects of marketplace discrimination that have occurred or are occurring in City's Relevant Marketplace. Vendor understands and agrees that a material violation of this clause shall be considered a material breach of this agreement and may result in termination of this agreement, disqualification of Vendor from participating in City contracts, or other sanctions. This clause is not enforceable by or for the benefit of, and creates no obligation to, any third party. Vendor shall include this nondiscrimination clause in all subcontracts for the performance of this contract.

Delinquent Taxes. In the event that Vendor is or subsequently becomes delinquent in the payment of taxes owed to the City of San Antonio, City reserves the right to deduct any delinquent taxes from payments that City may owe to the delinquent Vendor as a result of this contract.

Binding Contract. This contract shall be binding on and inure to the benefit of the parties hereto and their respective heirs, executors, administrators, legal representatives, and successors and assigns, except as otherwise expressly provided for herein.

Entire Agreement. This contract, including City's final electronically posted online version, together with its authorizing ordinance, and its price schedule(s), attachments, purchase orders, and exhibits, if any, constitutes the final and entire agreement between the parties hereto and contains all of the terms and conditions agreed upon. No other agreements, oral or otherwise, regarding the subject matter of this contract shall be deemed to exist or to bind the parties hereto, unless same be in writing, dated subsequent to the date hereof, and be duly executed by the parties, in accordance with the Amendment provision herein. **Parties agree that City's final electronically posted online version of this solicitation contains the agreed upon specifications, scope of services, and terms and conditions of this contract, and shall control in the event of a conflict with any printed version signed and submitted by Vendor.**

007 - SIGNATURE PAGE

By submitting an offer, whether electronically or by paper, Offeror represents that:

(s)he is authorized to bind Offeror to fully comply with the terms and conditions of City's Request for Offer for the prices stated therein;

(s)he has read the entire document, including the final version issued by City, and agreed to the terms therein;

Offeror is in good standing with the Texas State Comptroller's Office; and

to the best of his/her knowledge, all information is true and correct.

If submitting your offer by paper, complete the following and sign on the signature line below. Failure to sign and submit this Signature Page will result in rejection of your offer.

Offeror Information Please Print or Type	
Vendor ID No.	12267806
Signer's Name	Raymond Streeter, Enver Sarilar
Name of Business	ThyssenKrupp Airport Systems, Inc.
Street Address	3201 N. Sylvania Ave, Suite 117
City, State, Zip Code	Fort Worth, Texas 76111
Email Address	tkaps-customerservice@thyssenkrupp.com
Telephone No.	(817) 210-5000
Fax No.	(817) 834-6985
City's Solicitation No.	6100001752

Signature of Person Authorized to Sign Offer

008 - STANDARD DEFINITIONS

Whenever a term defined by the Uniform Commercial Code ("UCC"), as enacted by the State of Texas, is used in the Contract, the UCC definition shall control, unless otherwise defined in the Contract.

All-or-None Offer - an RFO in which City will award the entire contract to one offeror only.

Alternate Offer - two or more offers with substantive variations in the item or service offered from the same offeror in response to a solicitation.

Assignment - a transfer of claims, rights or interests in goods, services or property.

Bid Bond - security to ensure that Offeror (a) will not withdraw the offer within the period specified for acceptance, and (b) will furnish any required bonds and any necessary insurance within the time specified in the solicitation.

City - the City of San Antonio, a Texas home-rule municipal corporation.

Contractor - the offeror whose offer is accepted by City and is, therefore, the person, firm or entity providing goods or services to City under a contract.

Director – the Director of City's Purchasing & General Services Department, or Director's designee.

Line Item - a listing of items in an offer for which an offeror is expected to provide separate pricing.

Offer - a complete, signed response to an RFO that, if accepted, would bind Offeror to perform the resultant contract.

Offeror - a person, firm or entity that submits an offer in response to a solicitation. The offeror whose offer is accepted by City may also be referred to herein as Contractor, Vendor or Supplier.

Payment Bond - a particular form of security provided by the contractor to protect City against loss due to the contractor's failure to pay suppliers and subcontractors.

Performance Bond - a particular form of security provided by the contractor to protect City against loss due to the contractor's inability or unwillingness to complete the contract as agreed.

Performance Deposit - security provided by the contractor to protect City against loss due to the contractor's inability or unwillingness to complete the contract as agreed.

Pre-Submittal Conference - a meeting conducted by City, held in order to allow offerors to ask questions about the proposed contract and particularly, the contract specifications.

Purchase Order - a validly issued order placed by an authorized City department for the purchase of goods or services, written on City's standard purchase order form, and which is the vendor's authority to deliver to and invoice City for the goods or services specified in an RFO for the price stated in vendor's offer.

Specifications - a description of what City requires and what Offeror must offer; a description of the physical or functional characteristics of a product or material, or the nature of a service or construction item.

Subcontractor - a person, firm or entity providing goods or services to a vendor to be used in the performance of the vendor's obligations under the contract with City.

Supplier - the offeror whose offer is accepted by City and is, therefore, the person, firm or entity providing goods or services to City under a contract.

Vendor - the offeror whose offer is accepted by City and is, therefore, the person, firm or entity providing goods or services to City under a contract.

009 - ATTACHMENTS

Attachment A – Price Schedule

Attachment B – Canopy Drawing and Parts List

ATTACHMENT A

PRICE SCHEDULE

ITEM 1:

Quantity	Description	Unit Price	Total Price
1 EA	Canopy Universal II, Part # A4959303	$ 11,219.00	$ 11,219.00

ITEM 2:

Quantity	Description	Unit Price	Total Price
1 EA	AutoLeveler, Part # A4209743	$ 2,300.00	$ 2,300.00

ITEM 3:

Quantity	Description	Unit Price	Total Price
1 EA	U-Profile, LH, Floor, Rot. Cab, Part # A4211369	$ 184.00	$ 184.00

ITEM 4:

Quantity	Description	Unit Price	Total Price
1 EA	U-Profile, RH, Floor, Rot. Cab, Part # A4211370	$ 184.00	$ 184.00

ITEM 5:

Quantity	Description	Unit Price	Total Price
1 EA	Shipping and Handling	$ 750.00	$ 750.00

ITEM 6:

Quantity	Description	Unit Price	Total Price
1 EA	Labor to stage damaged bridge	$ 0.00	$ 0.00

ITEM 7:

Quantity	Description	Unit Price	Total Price
1 EA	Protection materials for damaged bridge	$ 0.00	$ 0.00

ITEM 8:

Quantity	Description	Unit Price	Total Price
1 EA	Labor to repair damaged bridge	$ 5,700.00	$ 5,700.00

ITEM 9:

Quantity	Description	Unit Price	Total Price
1 EA	Equipment to move repaired bridge to Gate A16	$ 4,050.00	$ 4,050.00

ITEM 10:

Quantity	Description	Unit Price	Total Price
1 EA	Labor to move damaged bridge to Gate A16	$ 3,500.00	$ 3,500.00

ITEM 11:

Quantity	Description	Unit Price	Total Price
1 EA	Equipment to install repaired bridge at Gate A16	$ 5,500.00	$ 5,500.00

ITEM 12:

Quantity	Description	Unit Price	Total Price
1 EA	Labor to install repaired bridge at Gate A16	$ 8,723.00	$ 8,723.00

Grand Total: $ 42,110.00

Payment Terms: Net 30

ATTACHMENT B

PARTS LIST

ITEM	QTY	UM	PART NUMBER-TKAS	PART NUMBER-HUBNER	DESCRIPTION
1	1	EA	A4230317	04319988100 0002	CANOPY STANDARD
2	1	EA	A4230300	04310224600	TUBE MOTOR 120v
3	1	EA	A4230321	04310227700	TUBE MOTOR COMPLETE, DRIVE ASSY
4	1	EA	A4230319	14319980700	KINAMATIC, LEFT, 40MM
5	1	EA	A4230320	14319980500	KINAMATIC, RIGHT, 40MM
6	2	EA	A4230273	04310211800	BOTTOM GUIDE, COMPLETE, 14 ROLLS
7	1	EA	A4230322	04319989200 0002	REMOVABLE BUMPER
8	2	EA	A4230276	04310020201	HINGE, GALVANIZED
9	30	EA	A4230278	04310114900	FLOOR BRACKET
10	4	EA	A4230326	04470001300	BUSHINGS
11	10	EA	A4230327	04500035500	SPACER
12	2	EA	A4230347	04310056800	GUIDE, COMPLETE
13	1	EA	A4230345	04319980800	HOLDER, COMPLETE, LEFT
14	2	EA	A4230351	14310000500	GAS SPRING, 500N
15	2	EA	A4230355	04310038300	GAS SPRING, 300N
16	2	EA	A4230304	04310193700	BELT, 19MM
17	4	EA	A4230341	04480021100	FLANGE BLOCK
18	2	EA	A4230348	04310018700	SPRING
19	2	EA	A4230349	04310029500	SQUARE TUBE
20	2	EA	A4230356	04310056400	ANGLE
21	2	EA	A4230358	04310056900	RAIL, 500/150
22	2	EA	A4230360	04310080800	BRACKET PLATE
23	4	EA	A4230371	04310038400	PLATE
24	2	EA	A4230373	04310059700	GUIDE
25	2	EA	A4230375	04310038600	ROLL
26	2	EA	A4230376	04310038500	PLATE
27	1	EA	A4230377	04319980600	HOLDER, COMPLETE, RIGHT
28	2	EA	A4230378	04310006100	BRACKET
29	2	EA	A4230379	04310231100	BLOCK
30	2	EA	A4230362	04319982200	BRACKET, COMPLETE
31	2	EA	A4230363	04310056700	PLATE
32	2	EA	A4230367	04310056500	PLATE
33	2	EA	A4230368	04310056600	PLATE
34	4	EA	A4230369	04310008700	ROLL
35	1	EA	A4230380	04310006901	MOUNTING ANGLE, LEFT POWDER COAT
36	1	EA	A4230381	04310007400 0017	TUBE
37	1	EA	A4230382	04310224901	MOUNTING ANGLE, RIGHT POWDER COAT
38	2	EA	A4230383	04310220300	PULLEY, 140 X 63.5
39	2	EA	A4230297	04480021400	AXLE SUPPORT, 63MM
40	1	EA	A4230298	04310224800	WALLANKER TYPE 10/11
41	1	EA	A4230302	04430102600	PIN, DIN 94-4 X 28-A2
42	2	EA	A4230307	04310211900	AXLE
43	28	EA	A4230308	04310022900	SPACER
44	1	EA	A4230386	04310231600 0002	BUMPER COVER, TOP
45	1	EA	A4230387	04310231800 0002	BUMPER COVER, RIGHT
46	1	EA	A4230388	04310271400 0002	BUMPER COVER, LEFT
47	1	EA	A4230353	04310029200	BRACKET
48	2	EA	A4230385	04470001300	BUSHING, 10 X 12 X 12

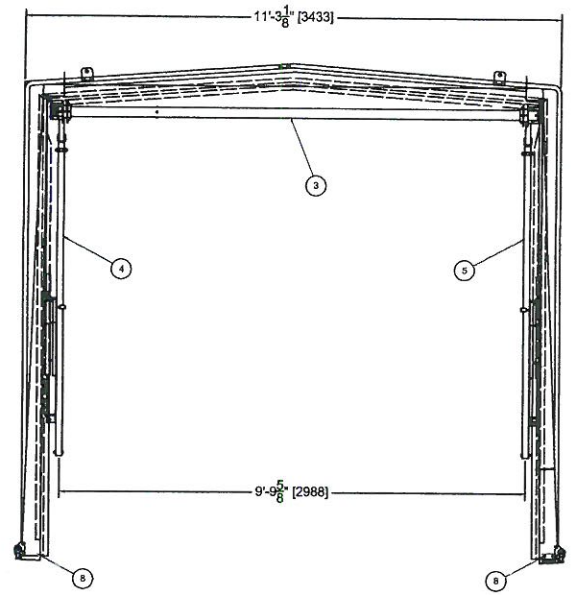

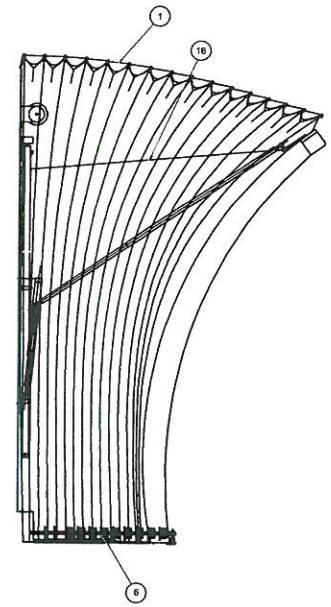

NOTES:
1. NOT TO SCALE.
2. ALL VIEWS ARE FOR PARTS IDENTIFICATION.
3. CANOPY A4959301 IS OBSOLETE. PARTS LIST IS FOR REPLACEMENTS AS NEEDED.
4. THIS WAS THE STANDARD CANOPY.

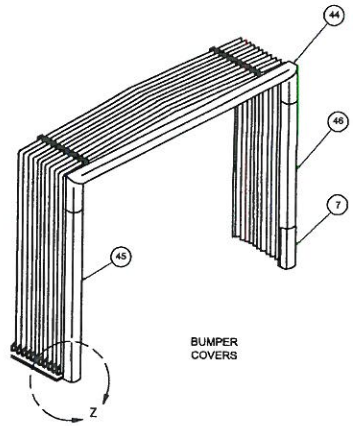

BUMPER COVERS

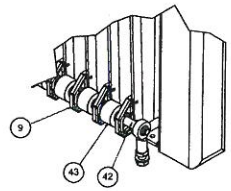

DETAIL Z
ITEM 6 COMPONENTS

STANDARD CANOPY		
PART NO.	DESCRIPTION	MFG. PART NO.
A4959301	STANDARD CANOPY	04319980300

8748 A 11/3/10